10/100BASE-T Fast Ethernet

# Media Converter

NMC-3301 User's manual

Rev:2.1

## 1.Overview

The Media Converter complies with IEEE802.3, IEEE802.3u, IEEE802.3x Standards. It is designed to convert data signal between 100 Base-Tx and 100 Base-Fx fast Ethernet. The data signal converted by such high performance media converter can be transmitted up to 20Km maximum by fiber-optical cable.

The Converter is equipped with two fiber opticconnectors (One for transmitting-Tx and another for receiving-Rx), two RJ-45 Jacks and one external power supply receptacle. Six LED indicators are built-in for easy diagnosing and monitoring the status of power, Unshielded Twisted Paired (UTP) Link, UTP Activity, Fiber Link, Fiber Activity, Full duplex and data rates. It can be configured automatically for Full Duplex or Half Duplex operation.

It is compact, cost-effective, low dissipative, high reliable and stable. It can be used in standalone applications or Rack-Mounted applications where multiple media converter can be inserted into a rack-mount chassis (Up 10 units) and allowing all the converters to be powered by a single internal power supply.

## 2.0 Specifications:

### 2.1 Performance Introduction

| Parameter | Type |
|---|---|
| Data Rate(Mbps) | 10/100 |
| Optical Wavelength(nm) | 1310 |
| Fiber Type(μm) | Single Mode 9/125* |
| Connector Type | SC |
| Max Distance(Km) | 20Km |
| Power Supply | AC110-220V/+5V DC, 1A |
| Operating Temperature | 0-70℃ |
| Storage Temperature | -40~80℃ |
| Relative Humidity | 5% to 90% non condensing |
| EMI and Safety | CE，FCC Class A |
| Dimensions | 170mm×120mm×30mm |

### Front Panel

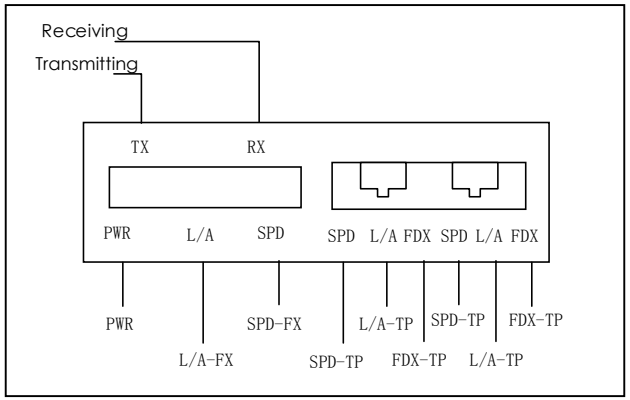


### Led indicate

| LED | Color | Function |
|---|---|---|
| L/A-FX | Green | Lit when fiber connection is good<br>Blink when fiber data is active |
| SPD-FX | Green | Blink when fiber data is active |
| L/A-TP | Green | Lit when TP connection is good,<br>Blink when TP data is active |
| SPD-TP | Green | Lit,100Mbps; Non-light 10Mbps |
| FDX | Green | Lit when full-duplex mode is active |
| PWR | Green | Lit when +5V power is coming up |

## 3.0 Installing the Converter

3.1 For as a stand along unit.

3.11 Verify if the AC-DC adapter conforms to your country AC power requirement then insert power plus

3.12 Check the type of UTP(se fig.1)

UTP complies With IEEE802.3 Standards, and has two types:T568A T568B.

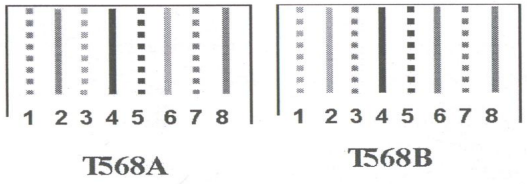


Fig.1 The type of UTP

**NOTE: G:** Green; **O:** Orange; **B:** Blue; **P:** Palm

**Parallel cable:** connect T568A to T568A,or T568B to T568B

Crossing-over: connect T568A to T568B

3.1.3 TP Port List (Fig.2)

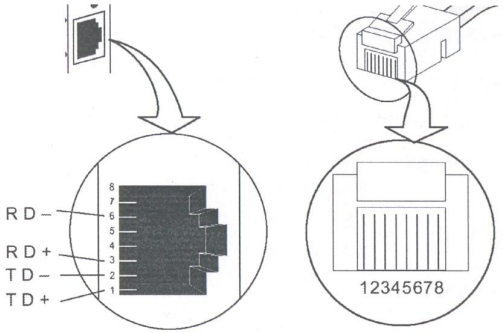


**4.0 Installing**

4.1 TP port installing

The RJ-45 port can connect the parallel lines “=” or The cross lines “X”

4.12 Fiber port installing

Connect the fiber-optic transceiver on the media converter with the Single-mode SC fiber connectors.

4.13 Connect to switch power adaptor

4.14 Check the appearance that converter instructions light. If connection right, the PWR,L/A LED is bright; Otherwise checking the Fiber port and TP port.

**Note: Connecting to Router, Bridge or Switch.Pleasa refer to the device’s Technical Manual.**